Product features

Main Unit: TCF9683AJ
(For Korean market: TCF9683KJ)
Toilet Bowl: CS966TA (S-Trap) Rough-in:305mm
Toilet Bowl: CS966PTA (P-Trap) Rough-in:120mm

Drawing

dimension: mm

S-Trap

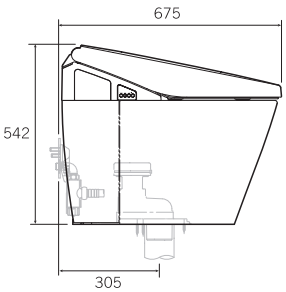

P-Trap

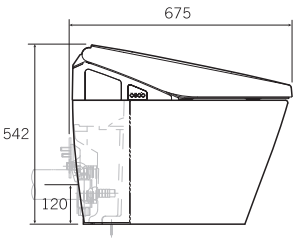

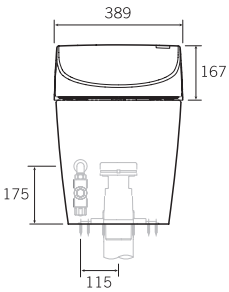

POWER CORD:L=1800

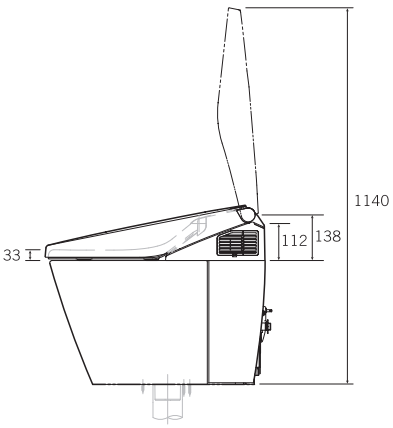

Comparison chart

		NEOREST A	NEOREST EX
PRODUCT NUMBER		TCF9683AJ (For Korean market: TCF9683KJ) S-Trap: CS966TA P-Trap: CS966PTA	TCF9911A (For Korean market: TCF9911K) CS991TU
COLOR		White	White
BOWL SHAPE		Elongated	Elongated
FLUSH VOLUME		6L/Flush, 4.5L/Light flush	6L/Flush, 4.5L/Light flush
CLEANSING	REAR CLEANSE	○	○
	FRONT CLEANSE	○	○
	SOFT REAR CLEANSE	○	○
	OSCILLATING CLEANSE	○	○
	PULSATING CLEANSE	○	○
	INSTANTANEOUS WATER HEATING	○	○
	WATER PRESSURE CONTROL	○	○
	WATER TEMPERATURE CONTROL	○	○
	NOZZLE POSITION ADJUSTMENT	○	○
COMFORT	SOFT LIGHTING	○	—
	SPACIOUS SEAT *1	○	—
	AIR PURIFIER (DEODORIZER)	○	○
	AIR DRYER	○	○
	AIR TEMPERATURE CONTROL	○	○
	HEATED SEAT	○	○
	HEATED SEAT TEMPERATURE CONTROL	○	○
	SEAT SENSOR	○	○
	AUTO OPEN/CLOSE	○	○
	AUTOMATIC FLUSH	○	○
	REMOTE CONTROL	○	○
	REMOTE-CONTROLLED SEAT AND LID	○	○
	REMOTE-CONTROLLED FLUSH	○	○
HYGIENE	CLEAN CONTOURS *2	○	—
	FULL-COVER LID	○	—
	SIDE PANEL	○	—
	REMOVABLE SEAT AND LID	○	○
	RIMLESS SHAPE	○	○
	TORNADO FLUSHING	○	○
	AUTO PRE-RINSE *3	○	—
	RINSE CYCLE *4	○	○
	SELF-CLEANING NOZZLE	○	○
	ANGLED SPRAY *5	○	○
	NOZZLE CLEANING BUTTON	○	○
	CLEAN-COAT TOILET SEAT	○	—
	CeFiONtect	○	○
	ANTIBACTERIAL COATING	○	○
FOR THE EARTH	ENERGY-SAVE TIMER	○	○
	AUTO ENERGY SAVER	○	○
	ON/OFF BUTTON	○	○

*1. The lid is set away from the user's back, creating more space.
*2. For easy, one-wipe cleaning of the bowl, the Washlet nozzle is concealed behind a door that is smoothly incorporated into the contours of the bowl.
*3. Before use, the bowl is automatically moistened with a little water to enhance the CeFiONtect effect.
*4. The water swirls and drains automatically to contribute to thorough cleaning.
*5 . As the water is sprayed at an angle, it does not fall back on the nozzle.